Montering för Connect

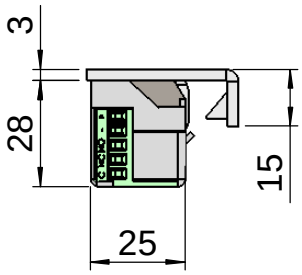

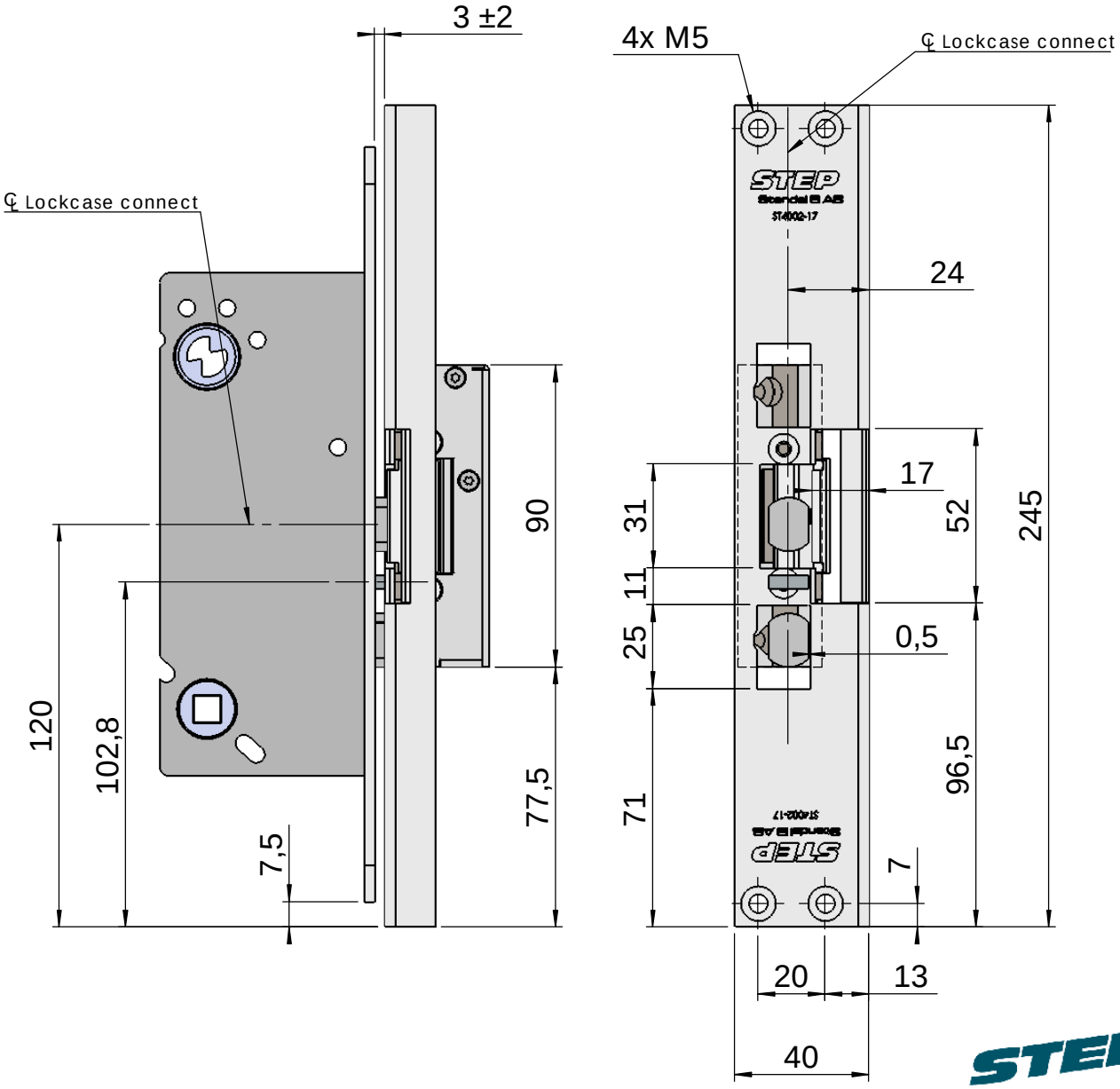

STEP 40 PRELOAD

Owner	Title/Description
Stendals El AB	STEP 40 med vinklad stolpe plös 17mm Montering för Connect
	Drawing no. ST4002-17 — Scale 1:2

This document shall not be copied without owners written allowance and its content shall not be exposed for third part nor be used for unauthorized purpose.

Montering för Modul

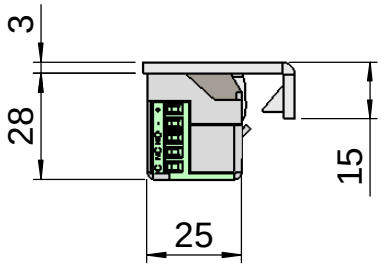

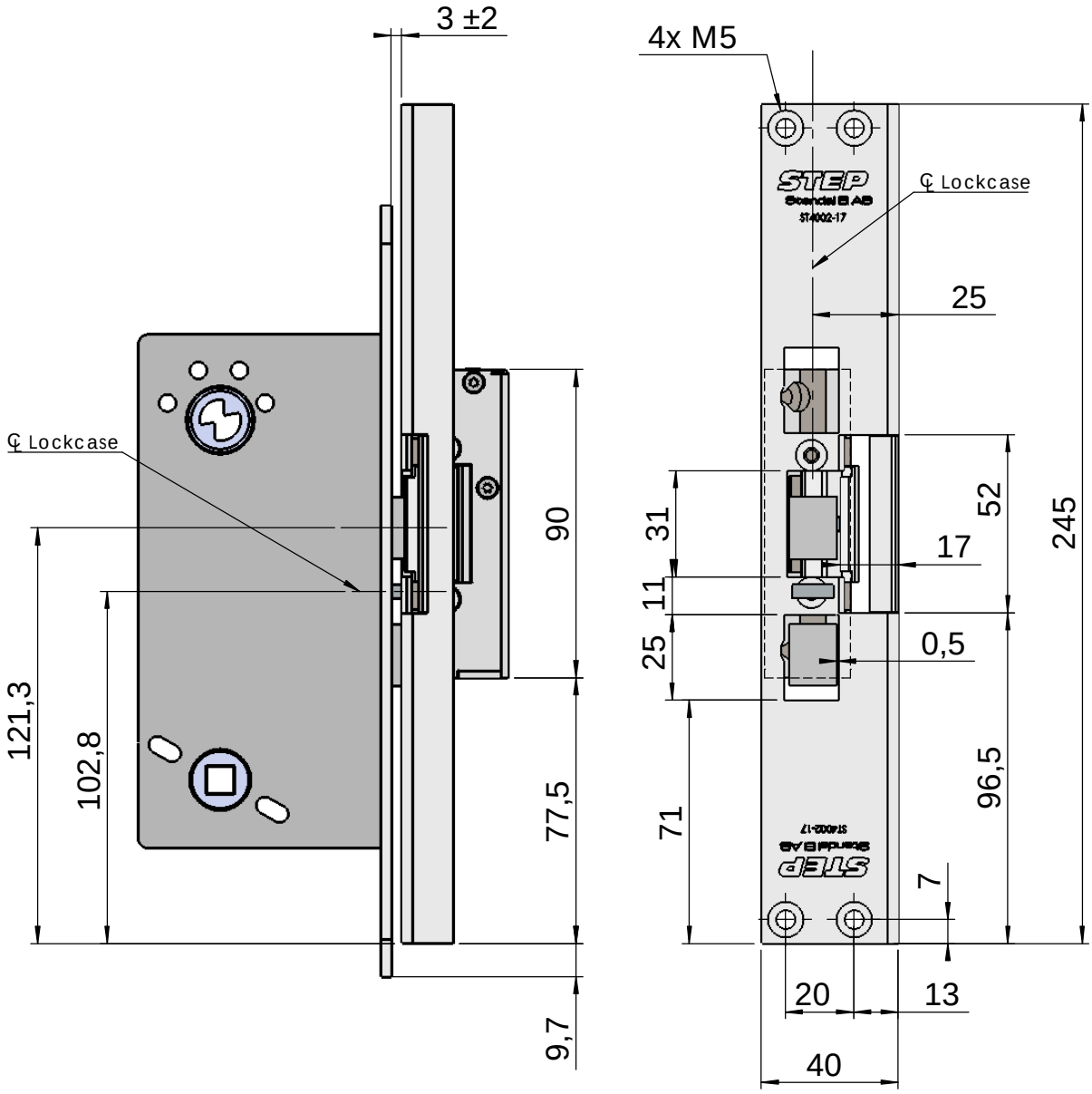

STEP 40 PRELOAD

Owner	Title/Description	
Stendals El AB	STEP 40 med vinklad stolpe plös 17mm Montering för Modul	
	Drawing no. ST4002-17	Scale 1:2

This document shall not be copied without owners written allowance and its content shall not be exposed for third part nor be used for unauthorized purpose.